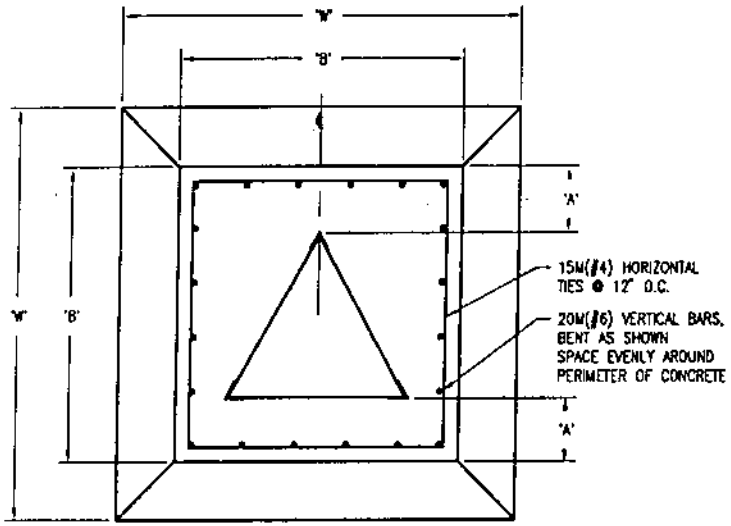

FOUNDATION PLAN

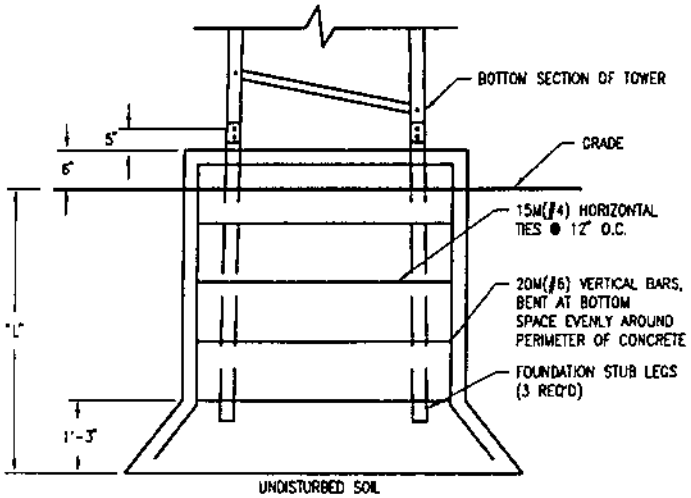

FOUNDATION ELEVATION

FOUNDATION NOTES:

CONCRETE:

1. CONCRETE CONSTRUCTION SHALL CONFORM TO THE REQUIREMENTS OF CSA STANDARD A-23 OR SIMILAR ASTM STANDARD.
2. CONCRETE SHALL HAVE A MINIMUM COMPRESSIVE STRENGTH AT 28 DAYS OF NOT LESS THAN 3000 PSI.
3. REINFORCING STEEL SHALL BE GRADE 50 DEFORMED BARS AND SHALL HAVE MINIMUM CONRETE COVER OF 3 INCHES.

FOUNDATIONS:

1. ALL FOUNDATIONS SHALL BE KEPT DRY, BY PUMPING IF NECESSARY, BEFORE POURING CONCRETE AND SHALL BE KEPT DRY UNTIL BACKFILL IS IN PLACE.
2. BACKFILL WITH GRANULAR MATERIAL COMPACTED IN LAYERS OF NOT MORE THAN 6 INCHES.
3. BACKFILL SHALL BE PLACED SO AS TO PREVENT ACCUMULATION OF WATER AROUND FOUNDATIONS OR ANCHORS.

DESIGN:

1. SOIL ANCHORAGE SHOWN HAS BEEN BASED ON NORMAL DRY SOIL ASSUMPTIONS. THESE ARE AS FOLLOWS:
   A) UNIT WEIGHT OF COMPACTED SOIL IS GREATER THAN 100 POUNDS PER CUBIC FOOT.
   B) WATER TABLE IS AT A DEPTH GREATER THAN 8 FEET BELOW GRADE.
   C) COEFFICIENT OF PASSIVE EARTH PRESSURE IS GREATER THAN 3.2.
   D) COEFFICIENT OF ACTIVE EARTH PRESSURE IS APPROXIMATELY 0.3.
   E) ORGANIC MATERIALS ARE NOT PRESENT IN THE SOIL.
   F) SOIL IS NOT ACIDIC.
   G) THE ALLOWABLE BEARING PRESSURE OF THE SOIL AT THE 5 FOOT DEPTH SHALL BE GREATER THAN 3500 POUNDS PER SQUARE FOOT.
2. THE INSTALLED FOUNDATION WILL HAVE A SAFETY FACTOR OF GREATER THAN 1.2 WHEN INSTALLED AS DESCRIBED (THE TOWER WILL FAIL PRIOR TO FOUNDATION FAILURE).
3. DESIGN ULTIMATE LOADS ARE AS PER TABLE BELOW.
4. FIGURES AND NOTES REPRESENT TRYLON TITAN SOIL FOUNDATIONS.
5. MAXIMUM FROST PENETRATION OF 3 FEET PRESUMED.
6. ANCHOR NUMBER ONE SHOULD BE USED FOR TOWERS WITH THE LOWEST SECTION HAVING A SECTION NUMBER OF 2, 3, 4, 5 OR 6.
7. ANCHOR NUMBER TWO SHOULD BE USED FOR TOWERS WITH THE LOWEST SECTION HAVING A NUMBER OF 7 OR 8.
8. ANCHOR NUMBER THREE SHOULD BE USED FOR TOWERS WITH THE LOWEST SECTION HAVING A SECTION NUMBER OF 9, 10, 11 OR 12.
9. ANCHOR NUMBER FOUR SHOULD BE USED FOR TOWERS WITH THE LOWEST SECTION HAVING A SECTION NUMBER OF 13.

GENERAL:

1. THE TOWER SHALL BE CENTERED ON THE CONCRETE CROSS SECTION SUCH THAT DIMENSION 'A' EQUALS DIMENSION 'A'.

ANCHOR TYPE	'B' (FEET)	'W' (FEET)	'L' (FEET)	HORIZONTAL REINFORCING	VERTICAL REINFORCING	OVERTURNING MOMENT (FT. KIPS)	SHEAR (KIPS)	CONCRETE VOLUME CUBIC YARDS
1	3	4	4	4	16	17	0.7	2.0
2	4	5	5	5	20	28	1.0	4.0
3	5	7	5	5	20	67	1.7	6.0
4	5.5	7.5	5.5	6	24	105	3.0	7.0

			B	ABC CHANGED TO TITAN	24 JAN 90

TRYLON MANUFACTURING CO. LTD.
ELMIRA, ONTARIO, CANADA

JOB NO.
TITLE: TITAN SOIL FOUNDATION
SCALE: NTS
CHECK BY:
DRAWING NO.
DATE